Motor starting reactor

Insulation class H

For high voltage / For low voltage

In this case, use the motor starting reactor.

- When the capacity of power supply is too small to withstand the full voltage starting current.
- When you want to prevent mechanical shock upon starting the motor.

Method of starting motor using starting reactor

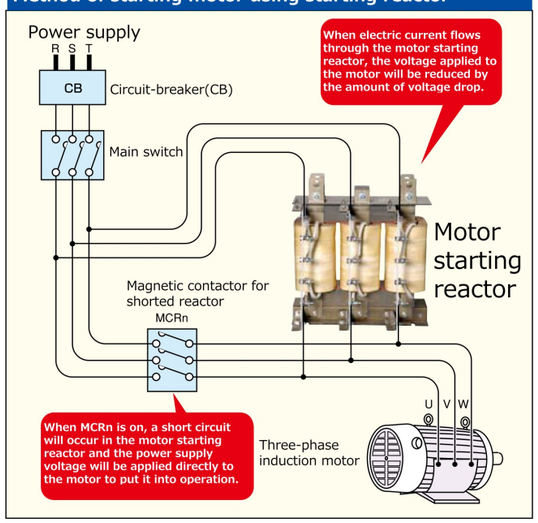

■

Number of phases	Three-phases	
Insulation class	H	
Applicable standard	JEC-2210:2003 Reactor JIS C 8201-4-1 2023 — Low-voltage switchgear and controlgear Part 4-1: Contactors and motor-starters Electromechanical contactors and motor-starters	
Rated frequency (Hz)	50	60
Circuit voltage (V)	200、400、 3000、6000	220、440、 3300、6600
Motor capacity	For low voltage 200V…45~220kW、 400V…45~500kW For high voltage 3000V…45~1900kW、 6000V…45~1900kW	For low voltage 220V…45~220kW、 440V…45~500kW For high voltage 3300V…45~1900kW、 6600V…45~1900kW
Full-voltage starting current (Rated time of 1 minute)	200V…900A~4400A 400V…450A~5040A 3000V…62A~2300A 6000V…30A~1150A	220V…900A~4400A 440V…450A~5040A 3300V…62A~2300A 6600V…30A~1150A

Time rating	1 minute, 3 minutes (Rated times other than the left are non-standard)
Taps	50%、65%、80%
Terminal shape	When for low voltage, Crimped terminal When for high voltage, Bolt tightening terminal

■ Option

Thermal protector (Thermostat)
Charging part protection cover
Wheels

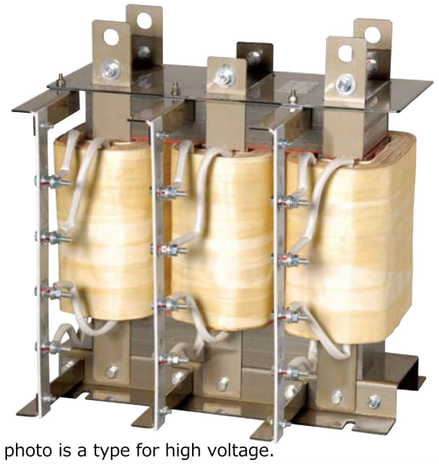

The photo is a type for high voltage.

Further pursuit of customer satisfaction !!

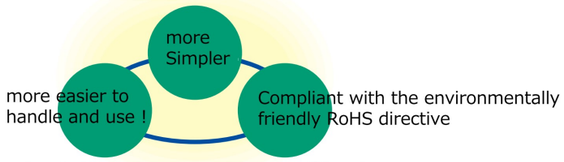

Characteristics During Motor Startup

- The smaller the starting current, the smaller the starting torque.
- Starting current can be adjusted by taps.

Characteristics During Motor Startup

- An increase in torque is extremely large.
- The maximum torque is the largest among the reduced voltage starting methods.
- Enabling a smooth acceleration.

■ Standard product model number

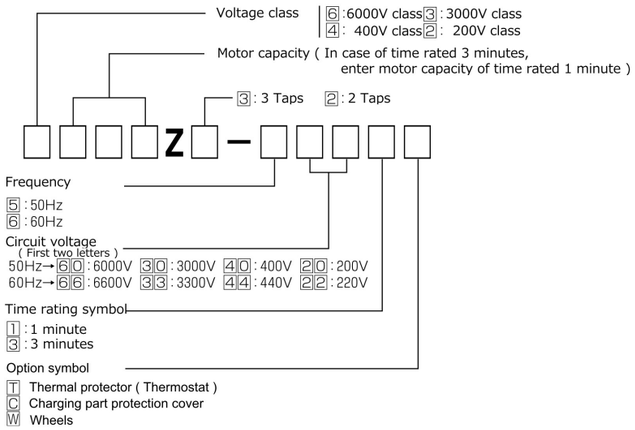

■ Non-standard product model number

For non-standard products, specify 1 to 7 instead of the model number.

① Circuit voltage (V)
② Motor capacity (kW)
③ Full-voltage starting current (A)
④ Frequency (Hz)
⑤ Rated time
⑥ Tap value (%)
⑦ Option

1 Selection method (Capacity)

- Considering the starting current at full voltage (Is)

Motor Starting reactor's Is ≧ Electric motor's Is

- Considering the capacity of electric motor

Motor Starting reactor's capacity (kW) ≧ Electric motor's capacity (kW)

Note:
Regarding the selection considering the capacity of electric motor, kindly note that the starting current at full voltage differs depending on a motor manufacturer.

2 Selection method (Time Rating)

Select the time rating from Table 1 considering the motor starting time.

Table 1

Motor starting time (sec)	Time rating (minute)
~15	※ 0.5
16~30	1
31~60	※ 2
61~90	3

※ 0.5 and 2 minutes are non-standard.

In the case of starting motor for 3 times or more in a row

Number of starts x Starting time ≦ Time rating of the motor starting reactor

3 Usage Time of Each Taps

Motor starting reactor is equipped with 50%, 65% and 80% taps. Since 65% tap is basically used as the standard for the time rating, the usage time of 80% and 50% taps can be shown as follows.

[0.7 times of the time rating with 80% tap]

[1.7 times of the time rating with 50% tap]

4 Number of Times of Continuous Operation

For the time rating calculated from the time rating selection method, the number of times of continuous operation can be calculated by the following formula according to the motor starting time.

$$\text{Number of times of continuous operation} = \frac{\text{Time rating (sec.)}}{\text{Motor starting time (sec.)}}$$

(Round down to the nearest decimal point)

5 Downtime Before Restarting

Motor starting reactor can be used only when starting a motor with a short time rating.
If you use it incorrectly, it may lead to overheating and burnout.

Please strictly follow the instructions below.

⚠ Do not use beyond the rated starting current.
⚠ Do not use beyond the time rating.
In order to restart the motor starting reactor after applying.

the current to the full-time rating, downtime is required for a restart as shown in Table 2.

Table 2

Circuit voltage (v)	Motor capacity ※	Downtime
200/220 400/440	45~90	1 hours 30 minutes
	110~350	2 hours
	400~500	2 hours 30 minutes
3000/3300 6000/6600	45~90	2 hours 30 minutes
	110~750	3 hours
	1000~1900	4 hours

※For 1 minute rated capacity of the motor.

However, if the startup time for a restart is 1/2 or less of the time rating, restart can be performed after a downtime of 1/4 hour or more of the pause time shown in Table 2.

If the startup time for a restart is 1/3 or less of the time rating, restart can be performed after a downtime of 1/6 hour or more of the pause time shown in Table 2.

Select List For low voltage(3Taps: 50/65/80%)

For Low voltage

■Outline drawing/Connection drawing

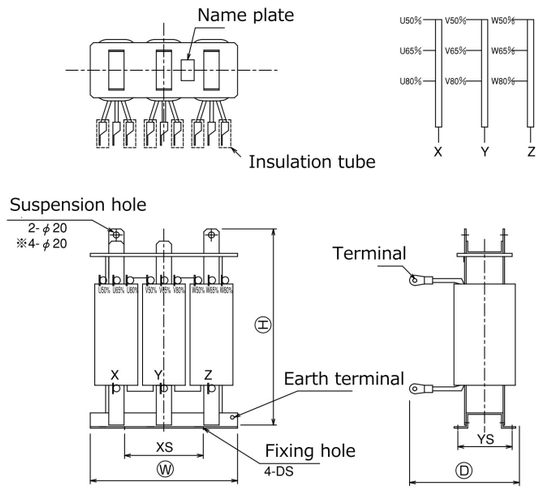

※The model of 4350Z3 and 4400Z3, 4500Z3 ,4 lifting holes.

■Three-phase 50Hz 200V / 60Hz 220V

Model	Full-voltage starting current (A) & Reference application motor(KW)				External dimension (mm)			Panel dimension (mm)			Terminal size	Total mass(kg)
	1 minute		3 minutes									
	Is	kW	Is	kW	Ⓦ	Ⓓ	Ⓗ	XS	YS	DS		
2045Z3	900	45	515	25	345	215	420	170	100	φ10 Slit	φ8.4	37
2055Z3	1100	55	635	29	345	250	390	170	140	φ10 Slit	φ8.4	51
2075Z3	1500	75	865	43	345	255	420	170	140	φ10 Slit	φ8.4	58
2090Z3	1800	90	1030	51	345	255	445	170	140	φ10 Slit	φ8.4	65
2110Z3	2200	110	1270	63	345	260	480	170	140	φ10 Slit	φ10.5	70
2132Z3	2640	132	1520	76	345	300	460	170	180	φ10 Slit	φ10.5	89
2150Z3	3000	150	1660	83	345	300	460	170	180	φ10 Slit	φ10.5	92
2160Z3	3200	160	1840	92	345	300	485	170	180	φ10 Slit	φ10.5	97
2200Z3	4000	200	2300	115	345	315	500	170	180	φ10 Slit	φ10.5	105
2220Z3	4400	220	2540	125	345	325	515	170	180	φ10 Slit	φ10.5	110

※ The dimensions and mass are those of a model rated at 50HZ for 1 minute. if other models, please contact us.

■Three-phase 50Hz 400V / 60Hz 440V

Model	Full-voltage starting current (A) & Reference application motor(KW)				External dimension (mm)			Panel dimension (mm)			Terminal size	Total mass(kg)
	1 minute		3 minutes									
	Is	kW	Is	kW	Ⓦ	Ⓓ	Ⓗ	XS	YS	DS		
4045Z3	450	45	255	25	345	195	440	170	100	φ10 Slit	φ8.4	37
4055Z3	560	55	320	29	345	250	390	170	140	φ10 Slit	φ8.4	52
4075Z3	750	75	430	43	345	235	410	170	140	φ10 Slit	φ8.4	56
4090Z3	900	90	515	51	345	255	430	170	140	φ10 Slit	φ8.4	62
4110Z3	1120	110	645	64	345	250	465	170	140	φ10 Slit	φ8.4	67
4132Z3	1320	132	760	76	345	290	435	170	180	φ10 Slit	φ8.4	84
4150Z3	1500	150	865	86	345	290	445	170	180	φ10 Slit	φ8.4	88
4160Z3	1600	160	920	92	345	295	445	170	180	φ10 Slit	φ8.4	89
4200Z3	2000	200	1150	115	345	290	500	170	180	φ10 Slit	φ8.4	103
4220Z3	2200	220	1270	125	345	300	515	170	180	φ10 Slit	φ10.5	107
4250Z3	2500	250	1440	140	345	305	550	170	180	φ10 Slit	φ10.5	120
4300Z3	3000	300	1730	170	345	300	600	170	180	φ10 Slit	φ10.5	133
4350Z3	3500	350	2020	200	405	335	590	190	220	φ12 Slit	φ10.5	164
4400Z3	4000	400	2300	230	405	345	615	190	220	φ12 Slit	φ10.5	174
4500Z3	5040	500	2900	290	405	345	720	190	220	φ12 Slit	φ10.5	208

※ The dimensions and mass are those of a model rated at 50HZ for 1 minute. if other models, please contact us.

Select List For high voltage(3Taps: 50/65/80%)

For high voltage

■Outline drawing/Connection drawing

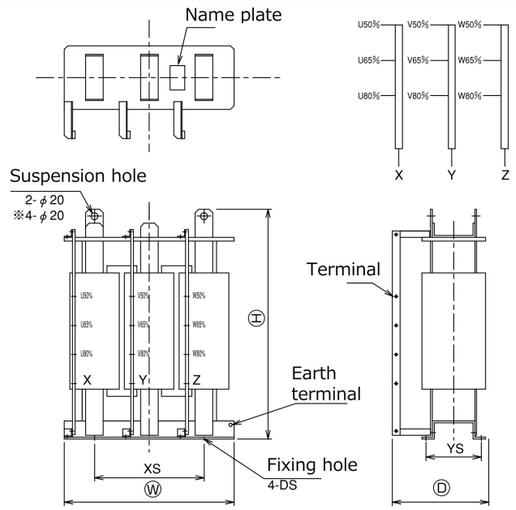

※The model of 3300Z3 and 6300Z3, 4 lifting holes.

■Three-phase 50Hz 3000V / 60Hz 3300V

Model	Full-voltage starting current (A) & Reference application motor(KW)				External dimension (mm)			Panel dimension (mm)			Terminal size	Total mass(kg)
	1 minute		3 minutes									
	Is	kW	Is	kW	Ⓦ	Ⓓ	Ⓗ	XS	YS	DS		
3045Z3	62	45	35	23	450	285	460	300	100	φ10 Slit	M8	45
3055Z3	80	55	46	30	450	325	425	300	140	φ10 Slit	M8	66
3075Z3	110	75	63	45	450	330	430	300	140	φ10 Slit	M8	69
3090Z3	132	90	76	52	450	330	445	300	140	φ10 Slit	M8	73
3110Z3	160	110	92	62	450	330	470	300	140	φ10 Slit	M8	81
3132Z3	185	132	105	71	450	330	475	300	140	φ10 Slit	M8	82
3150Z3	220	150	125	85	450	325	520	300	140	φ10 Slit	M8	91
3200Z3	285	200	160	110	450	365	505	300	180	φ10 Slit	M8	118
3220Z3	305	220	175	120	450	370	495	300	180	φ10 Slit	M8	122
3250Z3	340	250	195	135	450	370	505	300	180	φ10 Slit	M8	122
3300Z3	420	300	240	160	495	425	560	330	220	φ12 Slit	M8	166
3350Z3	470	350	270	185	495	425	575	330	220	φ12 Slit	M8	173
3400Z3	550	400	315	225	495	425	585	330	220	φ12 Slit	M8	178
3500Z3	680	500	390	280	495	465	595	330	260	φ12 Slit	M8	228
3600Z3	840	600	480	350	495	465	645	330	260	φ12 Slit	M8	254
3750Z3	1000	750	575	410	495	465	685	330	260	φ12 Slit	M8	275
310KZ3	1300	1000	750	540	585	485	690	390	260	φ15 Slit	M8	342
314KZ3	1700	1400	980	730	585	485	760	390	260	φ15 Slit	M8	385
319KZ3	2300	1900	1320	1000	585	525	790	390	300	φ15 Slit	M8	485

※ The dimensions and mass are those of a model rated at 50HZ for 1 minute. if other models, please contact us.

■Three-phase 50Hz 6000V / 60Hz 6600V

Model	Full-voltage starting current (A) & Reference application motor(KW)				External dimension (mm)			Panel dimension (mm)			Terminal size	Total mass(kg)
	1 minute		3 minutes									
	Is	kW	Is	kW	Ⓦ	Ⓓ	Ⓗ	XS	YS	DS		
6045Z3	30	45	17	25	495	280	515	310	100	φ10 Slit	M8	52
6055Z3	38	55	21	31	495	320	460	310	140	φ10 Slit	M8	72
6075Z3	50	75	28	42	495	320	485	310	140	φ10 Slit	M8	78
6090Z3	60	90	34	51	495	320	490	310	140	φ10 Slit	M8	80
6110Z3	81	110	46	69	495	325	515	310	140	φ10 Slit	M8	91
6132Z3	90	132	51	76	495	320	540	310	140	φ10 Slit	M8	96
6150Z3	100	150	57	85	495	320	570	310	140	φ10 Slit	M8	102
6160Z3	110	160	63	94	495	320	595	310	140	φ10 Slit	M8	104
6200Z3	135	200	77	105	495	360	585	310	180	φ10 Slit	M8	140
6220Z3	150	220	86	120	495	360	610	310	180	φ10 Slit	M8	145
6300Z3	220	300	125	180	555	395	625	360	220	φ12 Slit	M8	189
6350Z3	235	350	135	200	555	395	635	360	220	φ12 Slit	M8	196
6400Z3	265	400	150	220	555	395	680	360	220	φ12 Slit	M8	210
6500Z3	315	500	180	255	555	395	685	360	220	φ12 Slit	M8	219
6600Z3	420	600	240	355	555	435	695	360	260	φ12 Slit	M8	281
6750Z3	480	750	275	420	555	435	690	360	260	φ12 Slit	M8	283
610KZ3	650	1000	375	560	630	465	735	420	260	φ15 Slit	M8	369
614KZ3	880	1400	505	780	630	465	800	420	260	φ15 Slit	M8	416
619KZ3	1150	1900	660	1000	630	505	815	420	300	φ15 Slit	M8	512

※ The dimensions and mass are those of a model rated at 50HZ for 1 minute. if other models, please contact us.

Select List For low voltage(2Taps: 65/80%)

For Low voltage

■Outline drawing/Connection drawing

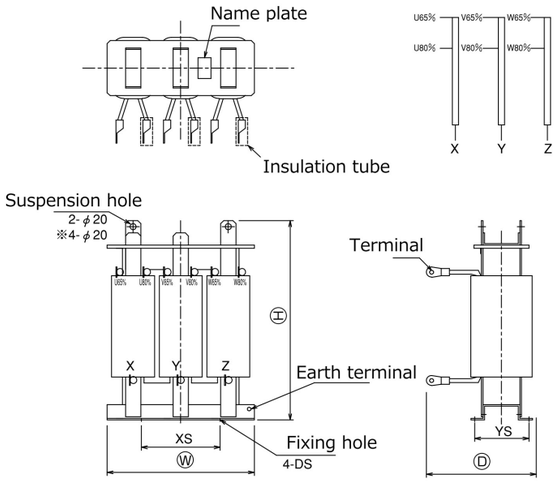

※The model of 4350Z2 and 4400Z2, 4500Z2 ,4 lifting holes.

■Three-phase 50Hz 200V / 60Hz 220V

Model	Full-voltage starting current (A) & Reference application motor(KW)				External dimension (mm)			Panel dimension (mm)			Terminal size	Total mass(kg)
	1 minute		3 minutes									
	Is	kW	Is	kW	Ⓦ	Ⓓ	Ⓗ	XS	YS	DS		
2045Z2	900	45	515	25	345	215	395	170	100	φ10 Slit	φ8.4	32
2055Z2	1100	55	635	29	345	250	380	170	140	φ10 Slit	φ8.4	47
2075Z2	1500	75	865	43	345	250	395	170	140	φ10 Slit	φ8.4	52
2090Z2	1800	90	1030	51	345	250	410	170	140	φ10 Slit	φ8.4	55
2110Z2	2200	110	1270	63	345	265	405	170	140	φ10 Slit	φ10.5	56
2132Z2	2640	132	1520	76	345	300	400	170	180	φ10 Slit	φ10.5	76
2150Z2	3000	150	1660	83	345	300	405	170	180	φ10 Slit	φ10.5	77
2160Z2	3200	160	1840	92	345	300	415	170	180	φ10 Slit	φ10.5	80
2200Z2	4000	200	2300	115	345	325	425	170	180	φ10 Slit	φ10.5	85
2220Z2	4400	220	2540	125	345	325	455	170	180	φ10 Slit	φ10.5	92

※ The dimensions and mass are those of a model rated at 50HZ for 1 minute. if other models, please contact us.

■Three-phase 50Hz 400V / 60Hz 440V

Model	Full-voltage starting current (A) & Reference application motor(KW)				External dimension (mm)			Panel dimension (mm)			Terminal size	Total mass(kg)
	1 minute		3 minutes									
	Is	kW	Is	kW	Ⓦ	Ⓓ	Ⓗ	XS	YS	DS		
4045Z2	450	45	255	25	345	195	400	170	100	φ10 Slit	φ8.4	31
4055Z2	560	55	320	29	345	250	360	170	140	φ10 Slit	φ8.4	45
4075Z2	750	75	430	43	345	235	375	170	140	φ10 Slit	φ8.4	49
4090Z2	900	90	515	51	345	250	395	170	140	φ10 Slit	φ8.4	53
4110Z2	1120	110	645	64	345	250	415	170	140	φ10 Slit	φ8.4	56
4132Z2	1320	132	760	76	345	290	395	170	180	φ10 Slit	φ8.4	73
4150Z2	1500	150	865	86	345	290	410	170	180	φ10 Slit	φ8.4	77
4160Z2	1600	160	920	92	345	295	410	170	180	φ10 Slit	φ8.4	78
4200Z2	2000	200	1150	115	345	290	445	170	180	φ10 Slit	φ8.4	87
4220Z2	2200	220	1270	125	345	300	460	170	180	φ10 Slit	φ10.5	90
4250Z2	2500	250	1440	140	345	300	485	170	180	φ10 Slit	φ10.5	98
4300Z2	3000	300	1730	170	345	300	505	170	180	φ10 Slit	φ10.5	105
4350Z2	3500	350	2020	200	405	335	525	190	220	φ12 Slit	φ10.5	136
4400Z2	4000	400	2300	230	405	345	535	190	220	φ12 Slit	φ10.5	143
4500Z2	5040	500	2900	290	405	345	615	190	220	φ12 Slit	φ10.5	169

※ The dimensions and mass are those of a model rated at 50HZ for 1 minute. if other models, please contact us.

Select List For high voltage(2Taps: 65/80%)

For high voltage

■Outline drawing/Connection drawing

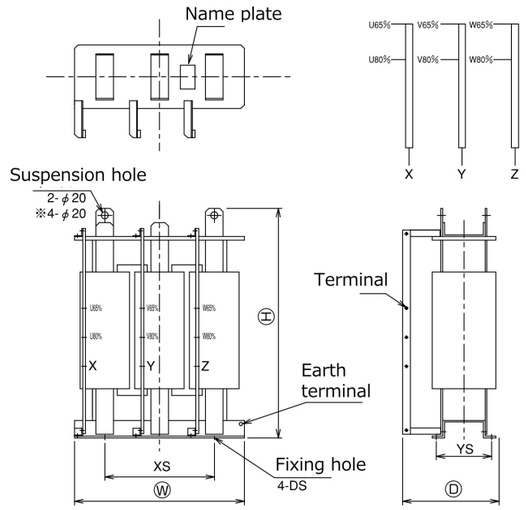

※The model of 3300Z2 and 6300Z2, 4 lifting holes.

■Three-phase 50Hz 3000V / 60Hz 3300V

Model	Full-voltage starting current (A) & Reference application motor(KW)				External dimension (mm)			Panel dimension (mm)			Terminal size	Total mass(kg)
	1 minute		3 minutes									
	Is	kW	Is	kW	Ⓦ	Ⓓ	Ⓗ	XS	YS	DS		
3045Z2	62	45	35	23	450	285	430	300	100	φ10 Slit	M8	38
3055Z2	80	55	46	30	450	325	400	300	140	φ10 Slit	M8	59
3075Z2	110	75	63	45	450	330	395	300	140	φ10 Slit	M8	60
3090Z2	132	90	76	52	450	325	420	300	140	φ10 Slit	M8	64
3110Z2	160	110	92	62	450	330	425	300	140	φ10 Slit	M8	69
3132Z2	185	132	105	71	450	330	430	300	140	φ10 Slit	M8	69
3150Z2	220	150	125	85	450	330	455	300	140	φ10 Slit	M8	75
3200Z2	285	200	160	110	450	365	450	300	180	φ10 Slit	M8	100
3220Z2	305	220	175	120	450	370	450	300	180	φ10 Slit	M8	103
3250Z2	340	250	195	135	450	365	460	300	180	φ10 Slit	M8	103
3300Z2	420	300	240	160	495	425	500	330	220	φ12 Slit	M8	141
3350Z2	470	350	270	185	495	425	515	330	220	φ12 Slit	M8	146
3400Z2	550	400	315	225	495	425	525	330	220	φ12 Slit	M8	151
3500Z2	680	500	390	280	495	465	520	330	260	φ12 Slit	M8	189
3600Z2	840	600	480	350	495	465	580	330	260	φ12 Slit	M8	213
3750Z2	1000	750	575	410	495	465	600	330	260	φ12 Slit	M8	226
310KZ2	1300	1000	750	540	585	485	615	390	260	φ15 Slit	M8	289
314KZ2	1700	1400	980	730	585	485	665	390	260	φ15 Slit	M8	319
319KZ2	2300	1900	1320	1000	585	525	685	390	300	φ15 Slit	M8	398

※ The dimensions and mass are those of a model rated at 50HZ for 1 minute. if other models, please contact us.

■Three-phase 50Hz 6000V / 60Hz 6600V

Model	Full-voltage starting current (A) & Reference application motor(KW)				External dimension (mm)			Panel dimension (mm)			Terminal size	Total mass(kg)
	1 minute		3 minutes									
	Is	kW	Is	kW	Ⓦ	Ⓓ	Ⓗ	XS	YS	DS		
6045Z2	30	45	17	25	495	280	470	310	100	φ10 Slit	M8	44
6055Z2	38	55	21	31	495	320	445	310	140	φ10 Slit	M8	67
6075Z2	50	75	28	42	495	320	455	310	140	φ10 Slit	M8	70
6090Z2	60	90	34	51	495	320	455	310	140	φ10 Slit	M8	71
6110Z2	81	110	46	69	495	320	475	310	140	φ10 Slit	M8	78
6132Z2	90	132	51	76	495	325	475	310	140	φ10 Slit	M8	80
6150Z2	100	150	57	85	495	320	500	310	140	φ10 Slit	M8	84
6160Z2	110	160	63	94	495	320	510	310	140	φ10 Slit	M8	85
6200Z2	135	200	77	105	495	360	520	310	180	φ10 Slit	M8	118
6220Z2	150	220	86	120	495	360	520	310	180	φ10 Slit	M8	119
6300Z2	220	300	125	180	555	395	560	360	220	φ12 Slit	M8	162
6350Z2	235	350	135	200	555	395	565	360	220	φ12 Slit	M8	165
6400Z2	265	400	150	220	555	395	595	360	220	φ12 Slit	M8	176
6500Z2	315	500	180	255	555	395	600	360	220	φ12 Slit	M8	181
6600Z2	420	600	240	355	555	435	610	360	260	φ12 Slit	M8	235
6750Z2	480	750	275	420	555	435	610	360	260	φ12 Slit	M8	237
610KZ2	650	1000	375	560	630	465	635	420	260	φ15 Slit	M8	307
614KZ2	880	1400	505	780	630	465	705	420	260	φ15 Slit	M8	347
619KZ2	1150	1900	660	1000	630	505	715	420	300	φ15 Slit	M8	426

※ The dimensions and mass are those of a model rated at 50HZ for 1 minute. if other models, please contact us.